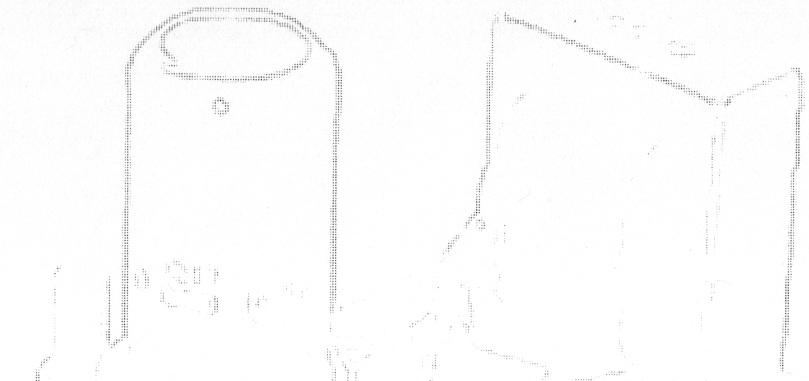

K-488

Wireless Transmitter kit
Assembly Instructions

Printed by:
Antique Electronic Supply
6221 S. Maple Ave.
Tempe, AZ 85283
USA

Ph: 480.820.5411 Fax: 480.820.4643 or 800.706.6789 www.tubesandmore.com

Parts List

Symbol	Part #	Description	Qty
C1	C-CD47-500	47 pf Capacitor, Disc	1
C2	C-CD82-500	82 pf Capacitor, Disc	1
C3	C-CD220-500	220 pf Capacitor, Disc	1
C4	C-TD01-400	.01 mf Capacitor, Axial, Non-polarized	1
C6	C-TD01-400	.01 mf Capacitor, Axial, Non-polarized	1
C5	C-TD047-400	.047 mf Capacitor, Axial, Non-polarized	1
C7	C-ET47-160	47 mf Capacitor, Axial, Polarized (arrow points to negative end)	1
C8	C-ET47-160	47 mf Capacitor, Axial, Polarized (arrow points to negative end)	1
C9	C-CDD002-1000	.002 mf Capacitor, Disc	1
D1	P-Q1N4007	Diode, 1A, 1000PIV	1
L1	P-C70-OSC	Oscillator Coil	1
R1	R-A22K	22k Resistor - red, red, orange	1
R2	R-A100K	100k Resistor - brown, black, yellow	1
R3	R-A1K	1k Resistor - brown, black, red	1
R4	R-A4D7K	4.7k Resistor - yellow, violet, red	1
R5	R-A2D2K	2.2k Resistor - red, red, red	1
T1	P-T442	Power Transformer	1
V1	T-12SA7	Metal Tube	1
	K-PBOARD-LG	3.5" x 6.5" Wood Breadboard	1
	K-P207	5/8" diameter x 1/2" Tall Wood Spacer	1
	K-P6-X-D375	#6 x 3/8" Phillips Head Wood Screw	10
	K-P6-X-1D5	#6 x 1 1/2" Round Head Wood Screw	2
	S-H112	#6 Ground Lugs	8
	S-H11-4034	Fahnstock Clips	3
	K-P770	Cable Clamp	1
	S-H408	Twist Wire Connectors	2
		Bus Wire	8 in
	K-PUL1569	Insulated Hook-up Wire (red)	8 in
	S-M436W	Spaghetti Insulation	3.5 in
	S-W104	Power Cord - 2 Conductor, Polarized	1
	P-ST8-209M	Tube Socket, Octal	1
	S-T702	Hex Alignment Tool	1

Assembly Instructions

Wireless Transmitter Kit K-488

The K-488 wireless transmitter is patterned after the 1939 Zenith model S-7000 phono oscillator. Like a tiny radio station, this device will transmit a tunable, AM signal over short distances to any broadcast band receiver. You can modulate the carrier with any high-level audio voltage source. For example, you may use the earphone output jack of a cassette tape player as a source of program material.

The instructions to follow assume that you have basic hand tools and ordinary electronic assembly skills, including the ability to solder. Simply follow the steps in order. It should be easy for you to assemble this kit in one evening.

Figure 1 Step 1

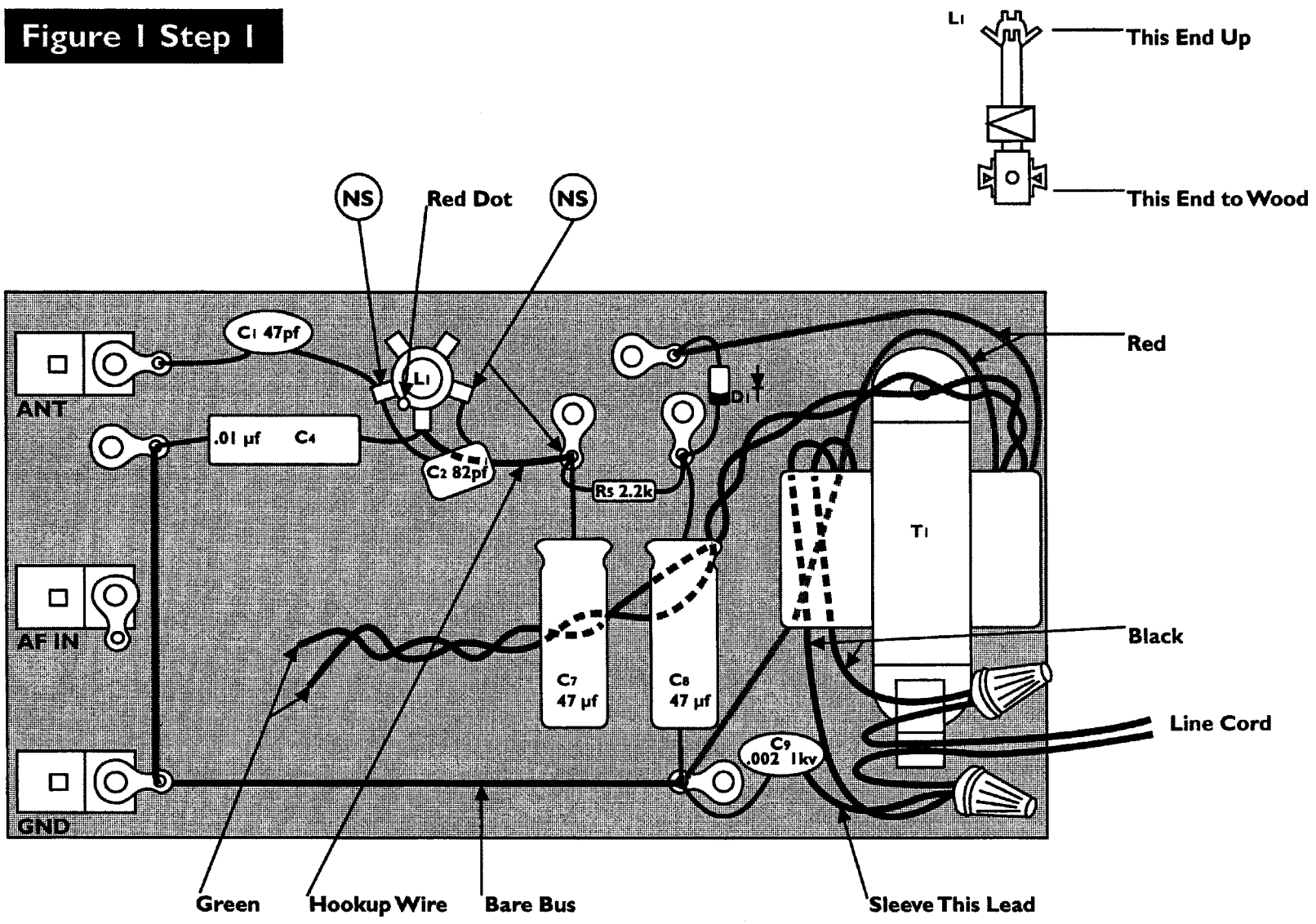

Solder All Connections Except Those Marked NS

Note:
Diode D1 must be connected so that the polarity marking (silver band) is facing the direction shown in this diagram.

Step 1

Unpack your kit and carefully check the contents against the parts list at the start of these instructions.

Optional Additional Step:
Although it is not absolutely necessary, we recommend that you stain and seal your breadboard before assembling (stain sealer not supplied). Avoid dark stains, as they sometimes exaggerate the grain of soft woods. Use a product like Minwax Puritan Pine, following the instructions that come with the product of your choice. If you elect to skip this step, proceed directly to the next paragraph.

Study Figure 1 carefully. Mount all of the components as shown. All lugs, clips and the power transformer are secured to the board with #6 x 3/8" Phillips head wood screws. To mount the coil (L1), carefully drill 3/8" hole (1/4" deep) in the board where shown. Insert the coil form into the hole so that the lugs on the coil are toward the breadboard. The coil may be secured to the breadboard with household cement if desired. The metal clip on top of the coil may be removed and discarded if desired. Orient the red dot on the coil as shown in Figure 1. Connect and solder all of the components pictured in the figure, but do not solder the connections marked "NS."

Important Safety Notice:
Be certain to sleeve the lead of the C9, which connects to the AC line. If any part of this lead is left exposed potentially lethal shock hazard will be created. Secure the AC line cord with the cable clamp supplied.

Figure 2 Step 2

Bottom View, Octal Socket

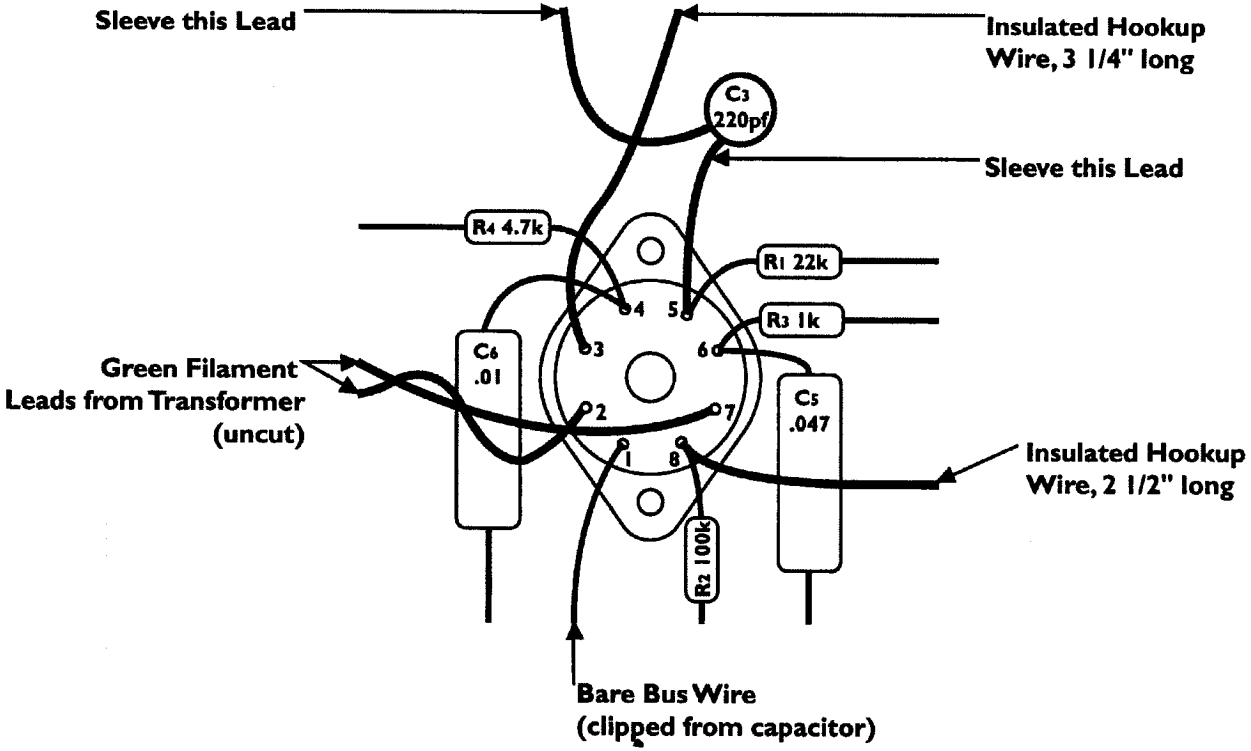

Step 2

Study Figure 2. In this step you will wire the octal socket, lugs up, as a subassembly before it is mounted on the breadboard. Connect all leads following the diagram as closely as possible. Take your time, paying particular attention to lead length and position, especially if the components supplied with your kit differ slightly in shape or size from those pictured. Connect and solder the filament leads from the power transformer last. Make certain all connections on the tube socket are soldered before proceeding.

Figure 3 Step 3

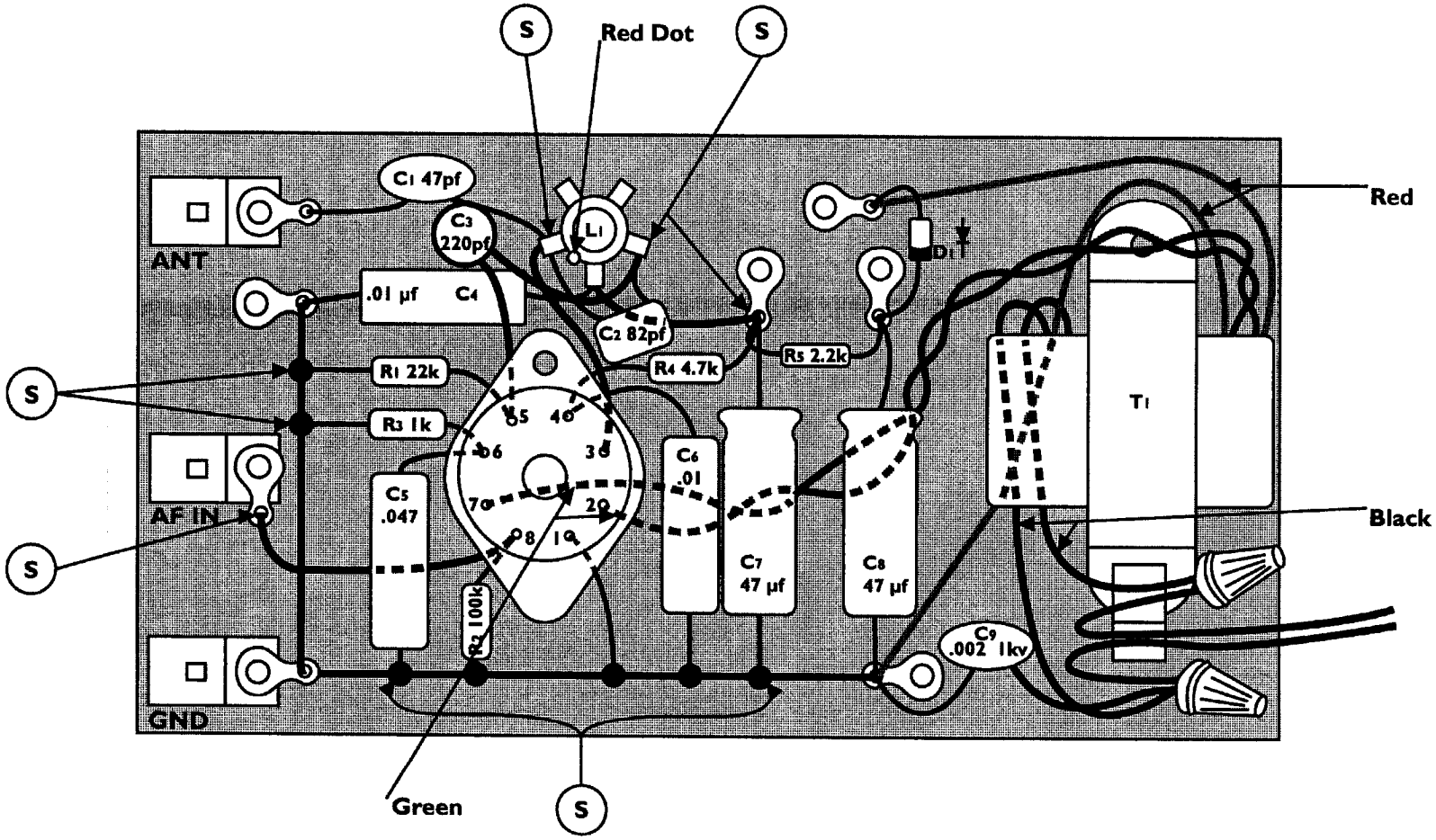

Solder All Connections Marked S

Step 3

In this step you will mount the tube socket on the breadboard, locating it as shown in figure 3. Place the wired tube socket sub-assembly, lugs down, on the top of the spacer and secure it using the two #6 x 1 1/2" round head screws.

After the socket is mounted on the board, complete all of the remaining connections as shown in figure 3. This is the final assembly step. Check your wiring carefully before testing.

Testing Your Transmitter

Connect a source of high level audio modulating voltage between the AF IN terminal and GND. Tune your AM broadcast receiver to a quiet spot on the dial somewhere between 1,100 and 1,600 KHZ. Place the transmitter near the receiver's loop antenna. If your receiver has no loop, bring its antenna lead near the transmitter. Turn the volume up high on the receiver and then tune the transmitter by adjusting the slug in coil LI until the signal is distorted, reduce the amplitude of the modulating signal until the distortion disappears.

Once your transmitter and receiver are tuned to the same frequency you can separate them and check signal propagation. You should not need to attach any radiating antenna to the transmitter. If necessary, however, you may attach a short (up to 6") antenna to the ANT clip of the transmitter to increase its range. Keep this lead as short as possible to avoid illegal radiation. Re-adjust the tuning slug (LI) with any change in antenna length.

Breadboard Drilling Template

Top View, Actual Size

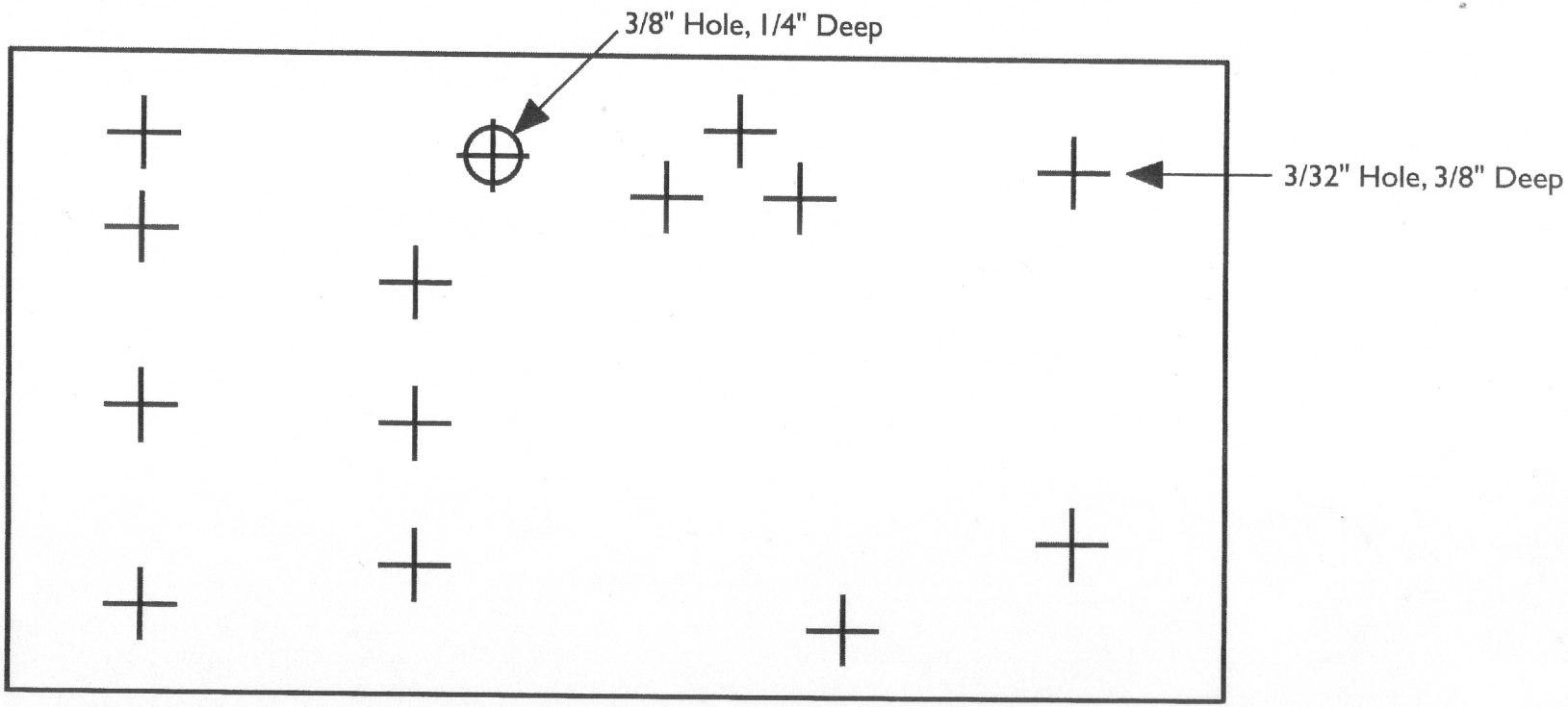

All holes are 3/32" drill, 3/8" deep except as noted
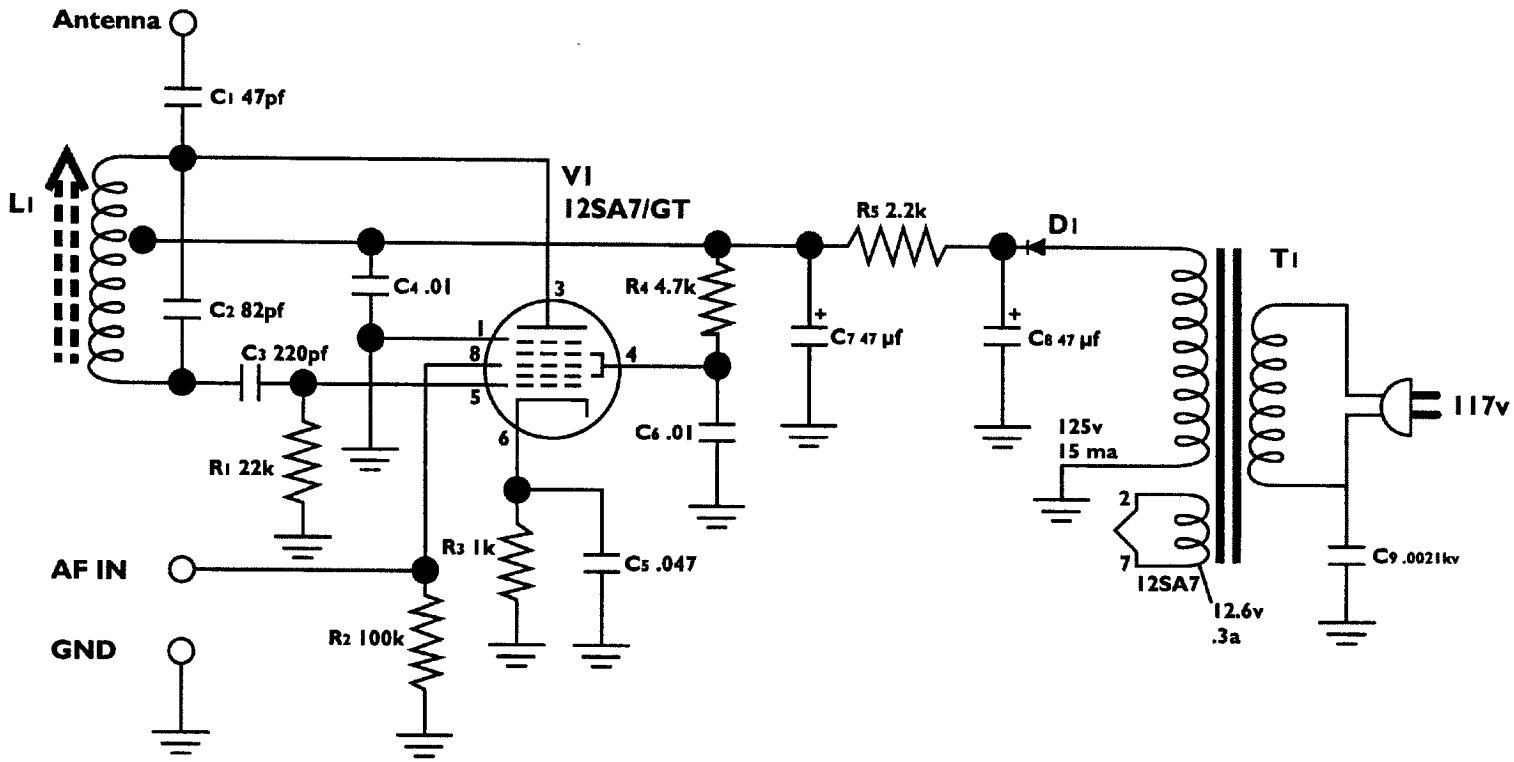
Figure 4
Schematic Diagram