from RMA registration #134,
April 11, 1938

TYPE 6F5GT

HYTRON BANTAM

GENERAL DESCRIPTION

Application: The Hytron 6F5GT is a cathode type high-mu triode designed primarily for service in high gain resistance coupled circuits.

The Hytron 6F5GT is a glass tube equipped with a small octal base and may be used interchangeably with the Hytron 6F5G glass tube where conditions permit larger size.

Physical Characteristics: Bulb T-9C

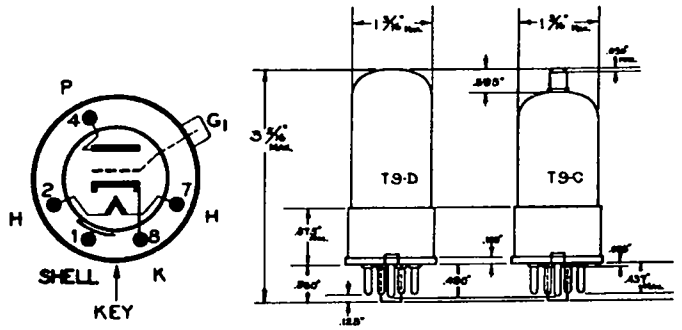

RATING AND CHARACTERISTICS

Heater:	
Voltage	6.3 Volts AC or DC
Current	0.3 Ampere

Note: Voltage between heater and cathode should be kept at a minimum if direct connection is not possible.

AMPLIFIER OPERATION (CLASS A RESISTANCE COUPLED)

*Plate Supply Voltage	250	250	Volts
Grid Voltage	-1.3	-1.3	Volts
Plate Current	0.2 to 0.4	0.2 to 0.4	Milliamperes
Plate Resistor	0.25 to 1.0	0.25 to 1.0	Megohm
Grid Resistor of Following Tube	0.25	0.5	Megohm
Output Voltage(5% 2nd Harmonic)	11 to 20	14.5 to 25.5	RMS Volts
Voltage Amplification	52 to 56	51 to 60	

*Effective plate voltage will be this value minus the voltage drop in the plate resistor. Voltage at plate should not exceed 250 volts.

AMPLIFIER OPERATION (CLASS A TRANSFORMER COUPLED)

Plate Voltage	250	Volts Max.
Grid Voltage	-2	Volts
Plate Current	0.9	Milliampere
Plate Resistance	66,000	Ohms
Amplification Factor	100	
Mutual Conductance	1,500	Micromhos

Direct Interelectrode Capacitances:

Grid No. 1 to Plate	2.0 μμf
Grid No. 1 to cathode	6.0 μμf
Plate to cathode	12.0 μμf

Note: For characteristic curves refer to the type 6F6G.

JETEC TYPE 6F5GT

TRIODE

MECHANICAL DATA

Coated unipotential cathode
Outline drawing. . . . . 9-17 or 9-47 Bulb. T-9
Base . . . . . B6-81 or B7-7 intermediate shell octal
or B7-84 or B7-59 short intermediate shell octal
Top cap. . . . . C1-2 skirted miniature
Maximum diameter . . . . . 1-9/32"
Maximum overall length . . . . . 3-5/16"
Maximum seated height. . . . . 2-3/4"
Pin connections. . . . . Basing 5M

*Pin 1 - No connection	Pin 5 - No connection
Pin 2 - Heater	Pin 7 - Heater
Pin 3 - No connection	Pin 8 - Cathode
Pin 4 - Plate	Top Cap- Grid

*Pin #1 omitted on Base Nos. B6-81 and B6-84

Mounting position. . . . . any

ELECTRICAL DATA

Ratings

Heater voltage (ac or dc).	6.3	volts
Maximum heater-cathode voltage	90	volts
Maximum plate voltage.	300	volts

Typical Operating Conditions and Characteristics, Class A1 Amplifier

Heater voltage	6.3	6.3	volts
Heater current	300	300	ma
Plate voltage.	100	250	volts
Grid voltage	-1.0	-2.0	volts
Plate resistance (approx.)	85,000	66,000	ohms
Transconductance	1150	1500	µmhos
Plate current.	0.4	0.9	ma
Amplification factor	100	100	

Refer to "Interpretation of Receiving Tube Ratings"