DIMENSIONS:	
A	3.125" ±0.063
B	3.436" ±0.125
C	3.800" ±0.063
D	2.500" ±0.063
E	2.188" ±0.063
G	0.203" x 0.400" ±0.015

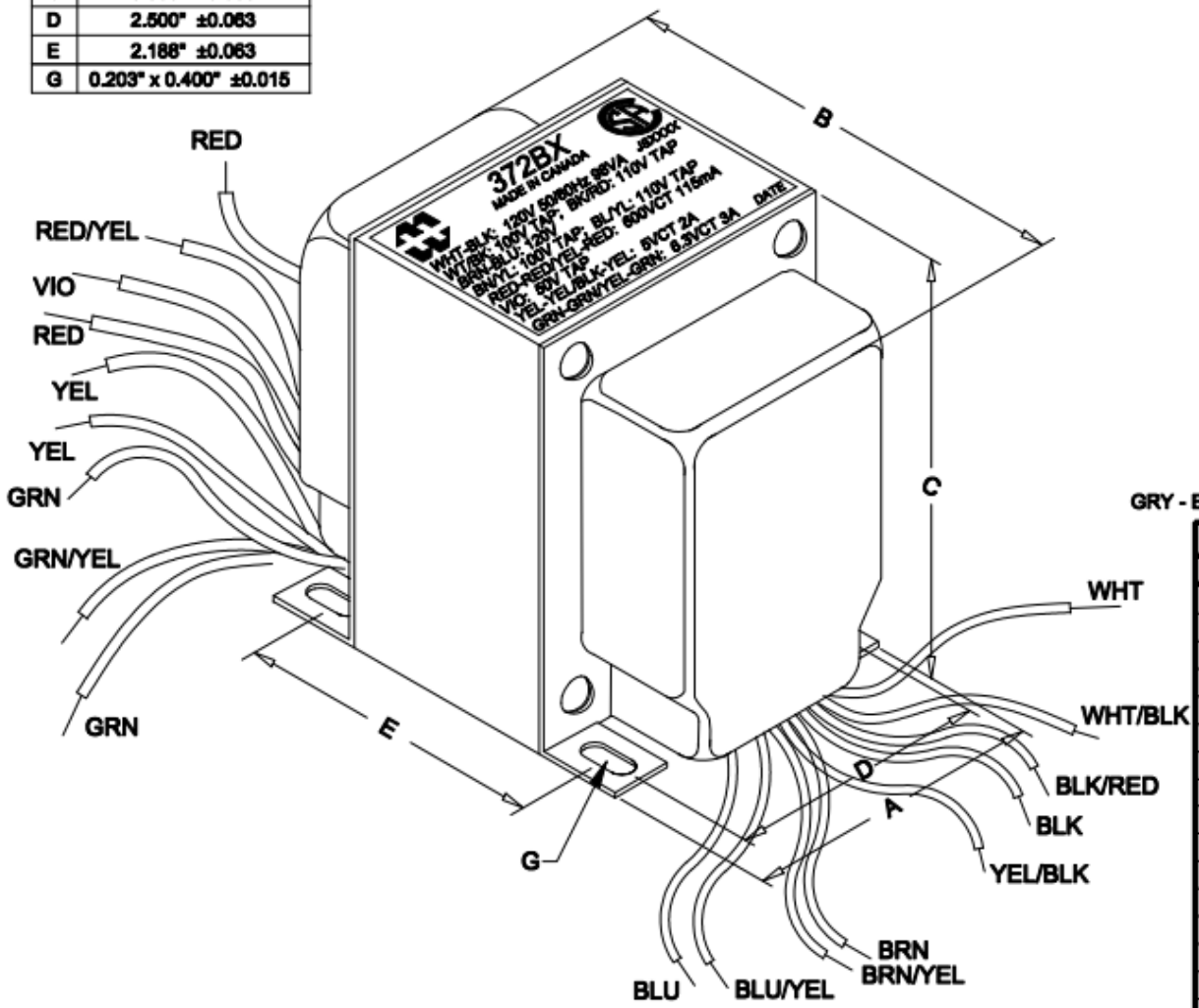

NOTE:ALL LEADS 8" OUT MIN. STRIPPED 0.5

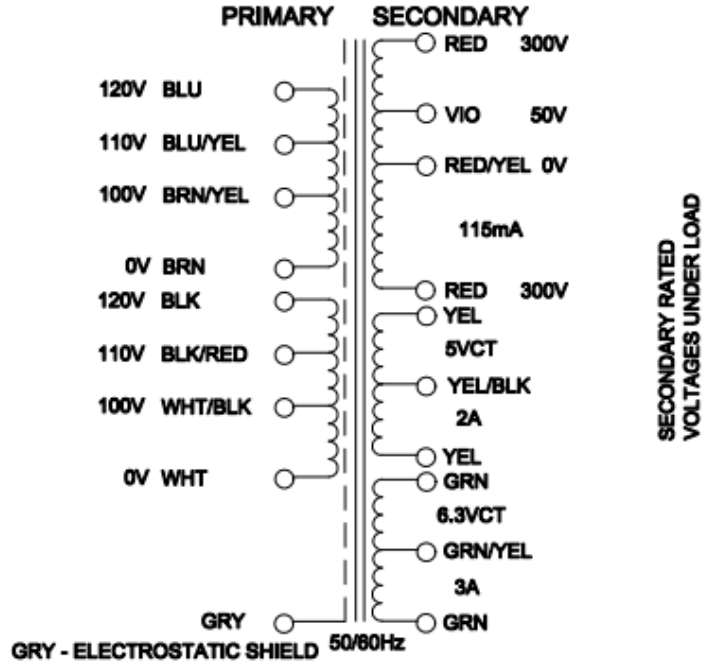

ELECTRICAL DATA:			
TESTS	CONDITIONS	ACCEPTANCE CRITERIA	
Iex	@ 120V, 60Hz, WHT - BLK	128.4mA	Max.
Sec. N.L.V	@ 120V, 60Hz, WHT - BLK		
	RED - RED =	646.3V	±2%
	RED - RED/YEL = RED/YEL - RED =	323.1V	±2%
	RED/YEL - VIO =	50.12V	±2%
	YEL - YEL =	5.307V	±2%
	YEL - YEL/BLK = YEL/BLK - YEL =	2.654V	±2%
	GRN - GRN =	6.781V	±2%
	GRN - GRN/YEL = GRN/YEL - GRN =	3.391V	±2%
DCR	@ 20°C, WHT - BLK =	7.915 Ω	±20%
	@ 20°C, BRN - BLU =	8.652 Ω	±20%
	@ 20°C, RED - RED =	208.8 Ω	±20%
	@ 20°C, YEL - YEL =	0.094 Ω	±20%
	@ 20°C, GRN - GRN =	0.092 Ω	±20%
HIPOT	PRIMARY - SECONDARY	2500V, 60Hz, 1 SEC	